ASTEEL GROUP

FLODEK

USER & INSTALLATION GUIDE

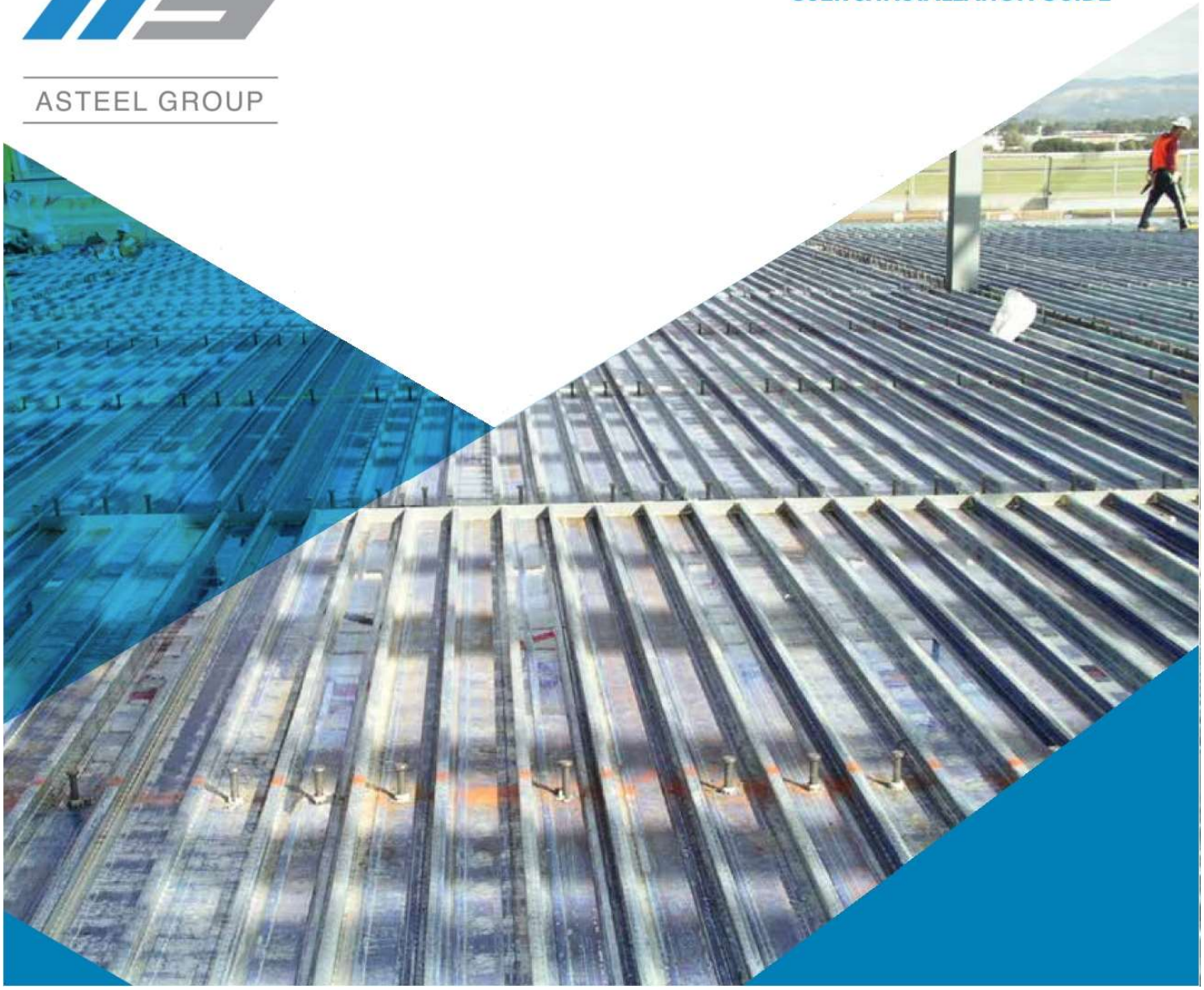

ASTEEL FLODEK™ is a traditional flat pan or 're-entrant' profile that provides unmatched performance in suspended concrete slabs.
FLODEK™ is used in both concrete and steel frame construction and utilises patented technology to achieve superior spanning capabilities, less deflection and greater composite strength than similar re-entrant profiles.
FLODEK™ comes complete with a range of accessories allowing for easy suspension of ceilings and surfaces.

DESIGN ADVANTAGES

Greater spanning capacities - FLODEK™ is stronger than similar decks in positive bending and end shear due to the dovetail ribs which resist lateral deflection by up to 10%.

MATERIAL SPECIFICATION

ASTEEL FLODEK profiled steel decking is roll-formed from G550 (550 MPa Yield Stress) steel with a Base Metal Thickness (BMT) of 0.75mm, 1.00mm and 1.20mm. The galvanised coating thickness is Z275 (275g/m2) in accordance with AS 1397:2001.

MAXIMUM SLAB SPANS (mm)
ASTEEL FLODEK™ sheets continuous over single slab span (FIGURE 1)
Formwork deflections limits L/240 (visual appearance important)

Slab Depth D (mm)	0.75 BMT Number of props per span			1.0 BMT Number of props per span		
	0	1	2	0	1	2
100	2,250	[5,950]	[8,250]	2,450	[6,500]	[9,000]
110	2,200	[5,750]	[8,000]	2,400	[6,300]	[8,750]
120	2,150	[5,600]	[7,800]	2,350	[6,150]	[8,550]
130	2,100	[5,500]	[7,600]	2,250	[6,000]	[8,300]
140	2,050	[5,350]	[7,400]	2,200	[5,850]	[8,150]
150	1,950	[5,250]	[7,200]	2,200	[5,750]	[7,950]
160	1,900	5,100	[6,950]	2,150	[5,650]	[7,800]
170	1,850	5,000	[6,750]	2,100	5,500	[7,650]
180	1,850	4,850	[6,550]	2,050	5,400	[7,550]
190	1,800	4,750	6,350	2,000	5,350	[7,400]
200	1,750	4,600	6,200	2,000	5,250	[7,200]
210	1,700	4,500	6,050	1,950	5,150	7,000
220	1,700	4,400	5,900	1,900	5,100	6,850
230	1,650	4,300	5,750	1,850	5,000	6,700
240	1,600	4,200	5,600	1,850	4,950	6,550
250	1,600	4,150	5,500	1,800	4,850	6,400

ASTEEL FLODEK™ PROFILE

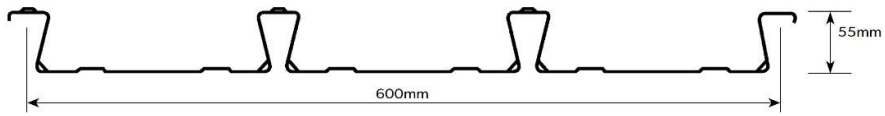

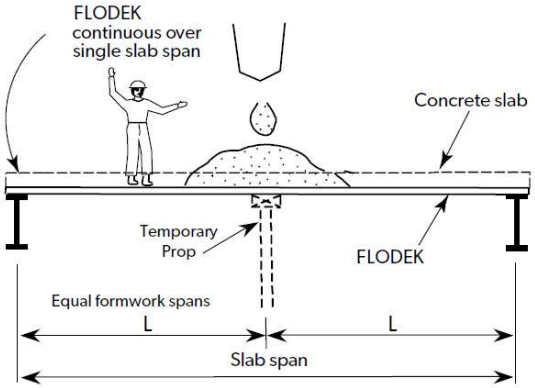

FIGURE 1
FLODEK™ sheets continuous over single slab span

NOTE:

1. The tables above denote maximum allowable centreline to centreline span in millimetres between permanent supports after temporary propping is removed.
2. The practical limit for span to slab depth ratio is considered to be 35 for single span slabs, or 40 for continuous slabs. Values above these limits have been listed in brackets "[ ]". The use of the results in brackets must be confirmed with the structural engineer or ASTEEL representative as the long term serviceability and composite performance of the resulting concrete slab may not be suitable for the project application.
3. Allowance has been made for ponding of wet concrete due to decking deflection, density 2400kg/m3.
4. Loading is considered in accordance with AS 1170.0:2002, AS 2327.1:2003, AS 3610:1995 with a Stage III construction live load allowance of 1.0kPa in accordance with AS 2327.1:2003 Appendix F.
5. The requirements for Stage II & IV material staking loads in accordance with AS 2327.1:2003 Appendix F are assumed to be zero.
6. It is recommended that an experienced structural engineer design the composite slab to ensure sufficient capacity to meet strength and long term deflection requirements.
7. The temporary propping tables have been prepared for a span/240 deflection criteria. A span/240 deflection is generally considered aesthetically satisfactory for exposed soffits.
8. These tables are based upon effective section properties of the sheeting calculated in accordance to AS 4600:2005.
9. Care must be exercised when placing concrete to avoid mounding.
10. Wide ply strips, of 300 mm wide, shall be provided to prevent any concentrated loads being applied to the sheeting, particularly for exposed soffits, to avoid direct point loading of the sheet overlap ribs and unsupported edges of the sheeting.
11. When using the table for two or more spans the adjacent spans should not differ in length by more than 5%.
12. A maximum sheet length of 12m has been considered.
13. A minimum bearing width of the permanent support has been considered to be 50mm.
14. ASTEEL recommend a gauge of 1.00 mm BMT for exposed soffits in propped applications to avoid creasing of steel decking. Please contact your local ASTEEL representative for further information.

MAXIMUM SLAB SPANS (mm)
ASTEEL FLODEK™ sheets continuous over two (2) or more slab spans (FIGURE 2)
Formwork deflections limits L/240 (visual appearance important)

Slab Depth D (mm)	0.75 BMT Number of props per span			1.0 BMT Number of props per span		
	0	1	2	0	1	2
100	2,700	[5,550]	[8,150]	2,950	[6,050]	[8,900]
110	2,650	[5,400]	[7,950]	2,900	[5,900]	[8,700]
120	2,550	[5,250]	[7,750]	2,800	[5,750]	[8,450]
130	2,500	5,150	[7,550]	2,750	[5,600]	[8,250]
140	2,450	5,000	[7,350]	2,700	5,500	[8,100]
150	2,350	4,900	[7,100]	2,600	5,400	[7,900]
160	2,300	4,750	[6,900]	2,550	5,300	[7,750]
170	2,200	4,600	6,650	2,500	5,200	[7,600]
180	2,150	4,450	6,450	2,500	5,100	[7,500]
190	2,100	4,350	6,300	2,450	5,000	7,300
200	2,050	4,200	6,150	2,350	4,900	7,100
210	2,000	4,100	5,950	2,300	4,800	6,950
220	1,950	4,000	5,950	2,250	4,650	6,800
230	1,900	3,900	5,900	2,200	4,550	6,600
240	1,850	3,850	5,750	2,150	4,450	6,500
250	1,800	3,750	5,650	2,100	4,350	6,350

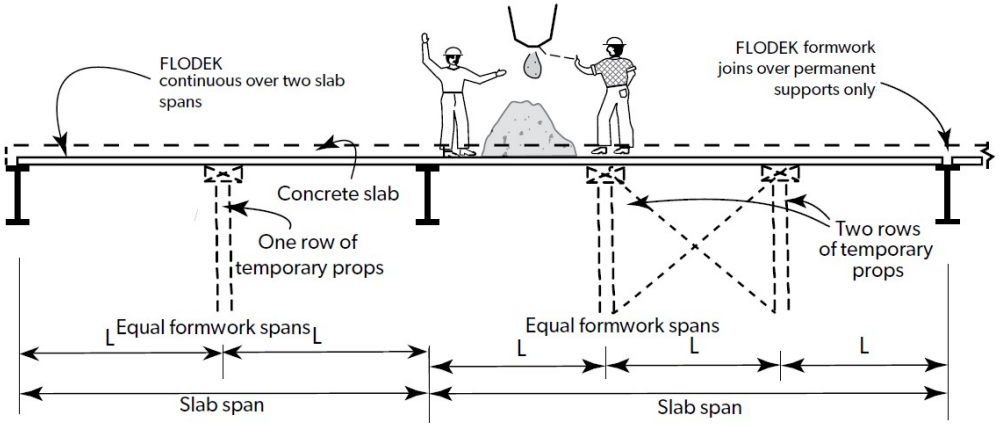

FIGURE 2
FLODEK™ sheets continuous over two (2) or more slab span

NOTE:

1. The tables above denote maximum allowable centreline to centreline span in millimetres between permanent supports after temporary propping is removed.
2. The practical limit for span to slab depth ratio is considered to be 35 for single span slabs or 40 for continuous slabs. Values above these limits have been listed in brackets "[ ]". The use of the results in brackets must be confirmed with the structural engineer or a ASTEEL representative as the long term serviceability and composite performance of the resulting concrete slab may not be suitable for the project application.
3. Allowance has been made for ponding of wet concrete due to decking deflection, density 2400kg/m3.
4. Loading is considered in accordance with AS 1170.0:2002, AS 2327.1:2003, AS 3610:1995 with a Stage III construction live load allowance of 1.0kPa in accordance with AS 2327.1:2003 Appendix F.
5. The requirements for Stage II & IV material staking loads in accordance with AS 2327.1:2003 Appendix F are assumed to be zero.
6. It is recommended that an experienced structural engineer design the composite slab to ensure sufficient capacity to meet strength and long term deflection requirements.
7. The temporary propping tables have been prepared for a span/240 deflection criteria. A span/240 deflection is generally considered aesthetically satisfactory for exposed soffits.
8. These tables are based upon effective section properties of the sheeting calculated in accordance to AS 4600:2005.
9. Care must be exercised when placing concrete to avoid mounding.
10. Wide ply strips, of 300 mm wide, shall be provided to prevent any concentrated loads being applied to the sheeting, particularly for exposed soffits, to avoid direct point loading of the sheet overlap ribs and unsupported edges of the sheeting.
11. When using the table for two or more spans the adjacent spans should not differ in length by more than 5%.
12. A maximum sheet length of 12m has been considered.
13. A minimum bearing width of the permanent support has been considered to be 50mm.
14. ASTEEL recommend a gauge of 1.00 mm BMT for exposed soffits in propped applications to avoid creasing of steel decking. Please contact your local ASTEEL representative for further information.

INSTALLING ASTEEL FLODEK™

TEMPORARY PROPPING

If temporary propping is required (refer to the temporary propping tables), props should be placed at the correct centres prior to laying the FLODEK™ sheets. Generally, timber or steel bearers with a minimum dimension of 75mm x 75mm are used on vertical props. The props should be installed so as to prevent settlement during loading by wet concrete and other construction loads.
Wide ply strips, of 300 mm wide, may be positioned above the header bearers to assist in dispersing the load and minimise any local deformation of the decking due to the headers.
Temporary props should only be removed after the slab has reached sufficient strength (at least 75% of the specified 28-day strength). The full design load may only be applied once the slab has achieved 28-day

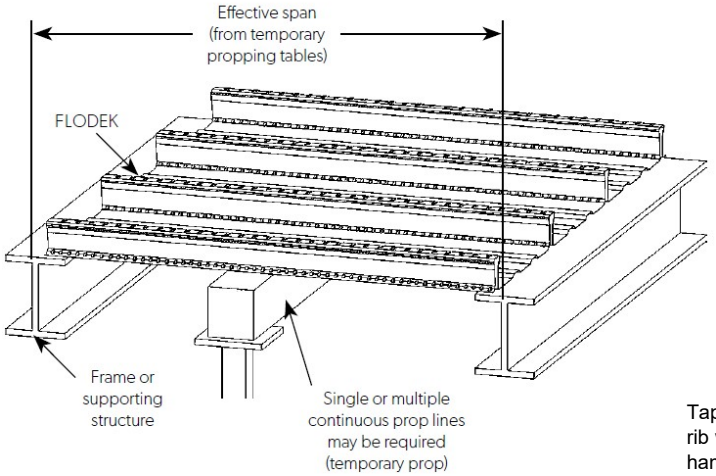

Place the FLODEK™ sheet over the supports ensuring a minimum end bearing of 50mm. If supporting on a brick or masonry wall, provide a separating strip such as malthoid.

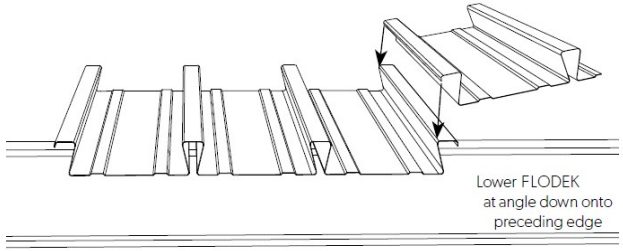

REINFORCEMENT

Place all reinforcement in strict accordance with the structural engineer's drawings and specification.

FASTENERS AND LOCATIONS

The decking must be secured to the supporting structure in order to avoid movement and excessive deflection during the pouring of concrete.
When fixing to a steel support structure, shot fired pins or self-drilling/ tapping fasteners should be used. Provide one fastener in each pan at every support.
In the case of other support systems, such as brickwork, block work and concrete, the FLODEK™ sheets must be temporarily held in place against wind and other effects until the concrete is poured.

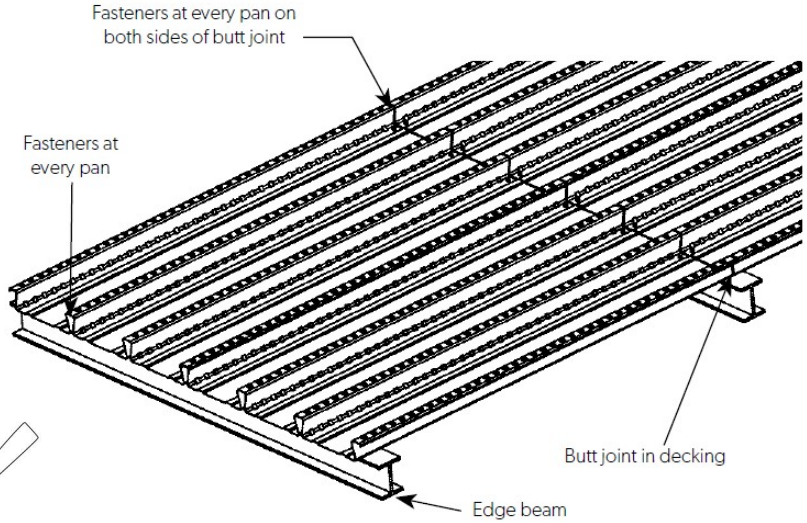

Tap the female rib with a hammer at a 45° angle to lock it into place.

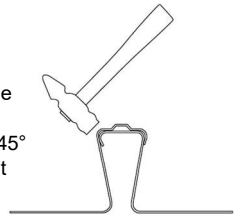

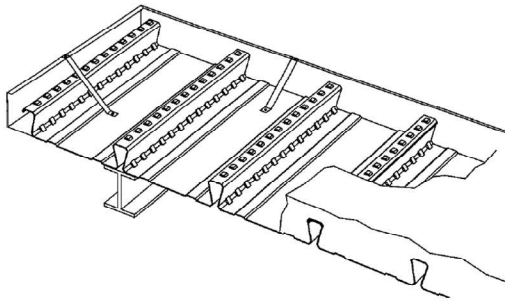

Galvanised steel edge-capping can be used for the retention of wet concrete to the correct level at the decked floor perimeters. Edge-capping is usually shot-fired to the steel support structure or to the FLODEK™ and the top of the edge-capping is connected back to the decking with restraint straps at approximately 600mm centres using either pop-rivets or self-drilling screws.

CONRETE PLACEMENT

The specified grade of concrete and any chemical admixtures must be in strict accordance with AS 3600:2001 and the structural engineer's drawings and specification. The deck must be clear of any excess dirt, grease or debris as this inhibits bonding between the deck and concrete. Ensure that concrete is applied evenly over the decking surface, as mounding of the wet concrete will cause excessive local loading.

INSTALLING ASTEEL FLODEK™

SHEAR STUD

Shear connectors are required on the top flange of steel composite bridge girders to provide the necessary shear transfer between the steel girder and composite slab that is required for composite action. The most widely used form of shear connector is the headed stud, or shear stud.

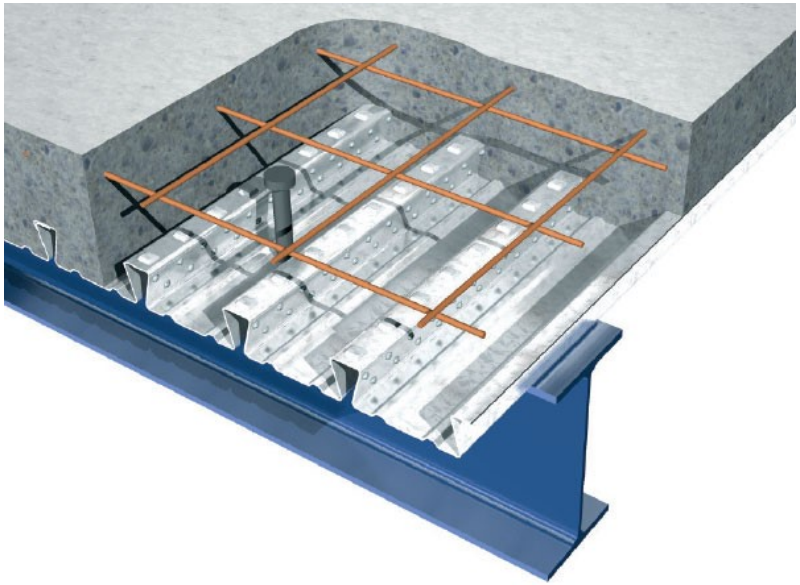

SHEAR STUD WELDING

Shear studs should be welded in accordance with the manufacturer's instructions, including preheating where necessary. The studs, and plate to which they are welded, must be dry and clean otherwise the quality of the weld will be adversely affected, and welding should not be carried out when the temperature is below 0°C. The equipment required for stud welding is specialist but readily portable, so although the majority of studs are welded in the shop, they could be welded on site if required, although it is unlikely to be economic for small numbers of studs: fillet welding is more practical for small numbers and such welds are structurally satisfactory. Where studs are manually welded on site, there should be a defined weld procedure; it is likely that preheat will be needed because the weld is small in extent.

Impact Bending Test

Sample of welded on base metal tested for impact bending

■ Welding Condition

Stud	19φ×100mm
Welder	DC Power Supply for Stud Welding

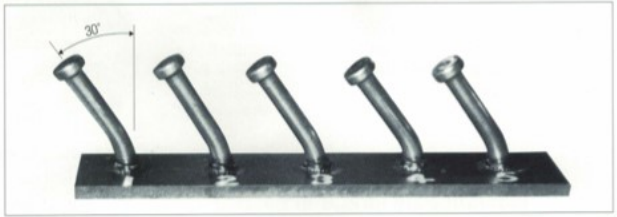

■ Result

No cracks or fissures were found neither at welding points or their circumferences when welded studs were bent with a hammer at 30 degrees as shown.

ASTEEL GROUP

MANUFACTURE BY:

ASTEEL (SARAWAK) SDN BHD (1363731-A)

Kuching Factory

Lot 801, Block 7,
Demak Laut Industrial Park,
93050 Kuching, Sarawak, Malaysia.
TEL: +6082 433888
FAX: +6082 433833

Bintulu Factory

Lot 598 Block 20, Jalan Tg. Kidurong,
Kidurong Industrial Estate,
97000 Bintulu, Sarawak, Malaysia.
TEL: +6086 255720
FAX: +6086 255020

Mukah Factory

Sublot 6&7, Lot 1114&1115,
Seng Ling Industrial Estate,
Jalan Bedanga,
96400 Mukah, Sarawak, Malaysia
TEL: +6016 7020 149

Miri Factory

Lot 7900 D/lot 872 Block 5,
Kuala Baram Land District,
98000 Miri, Sarawak, Malaysia.
TEL: +6085 651925
FAX: +6085 641045

DESIGN FLEXIBILITY | TERMITE PROOF | RECYCLING | IMPROVED COATING | DURABILITY | ASTEEL GROUP PRODUCT